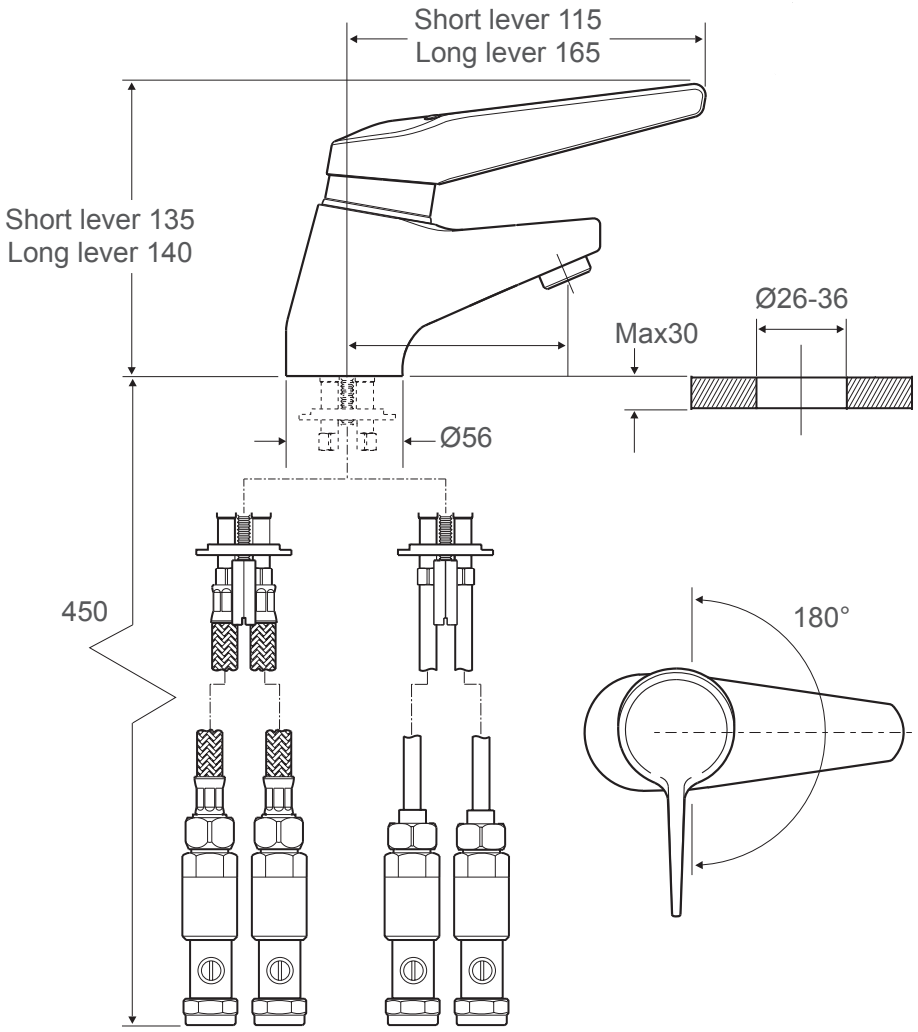
Short lever 115
Long lever 165
Short lever 135
Long lever 140
Ø26-36
Max30
Ø56
450
180°