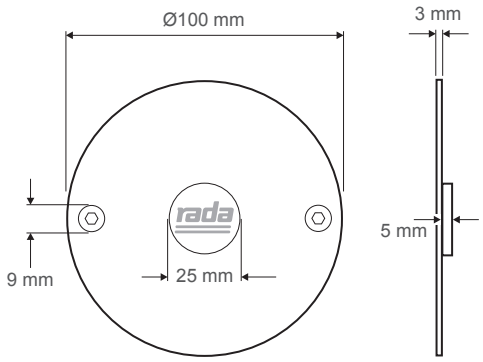
Ø100 mm
3 mm
5 mm
9 mm
25 mm
rada