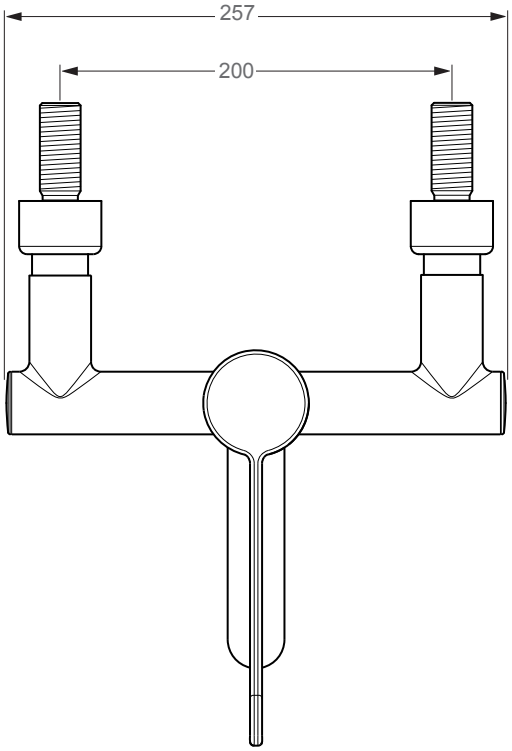
257
200

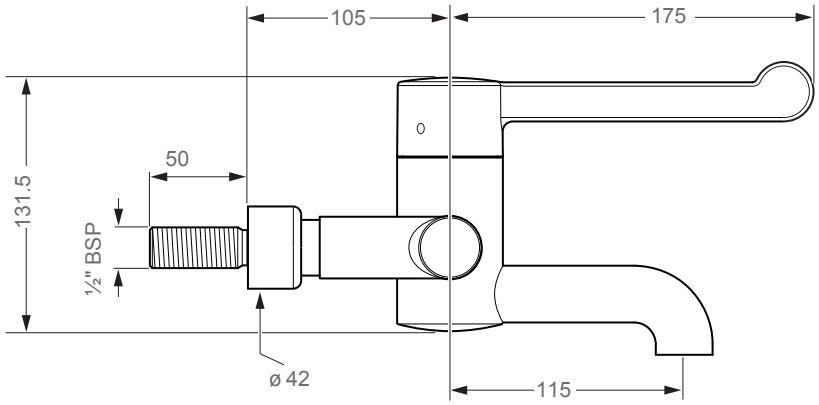
105
175
131.5
50
½" BSP
ø 42
115

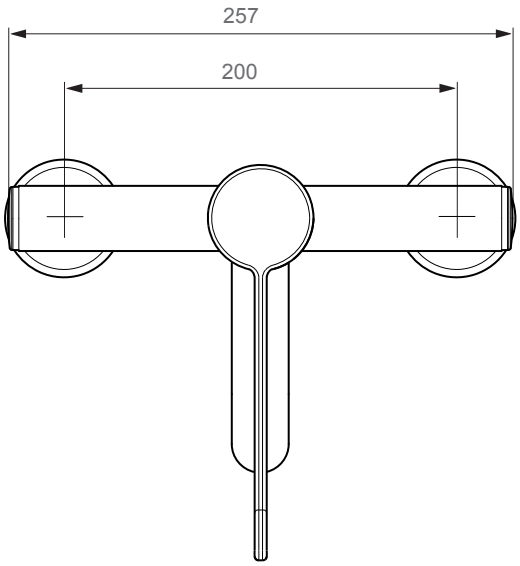
257
200

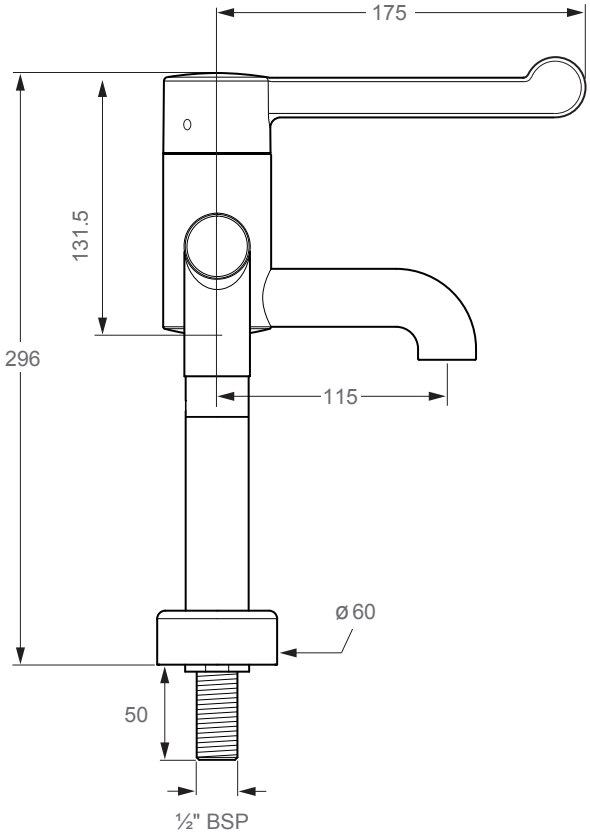
175
131.5
296
115
ø 60
50
½" BSP