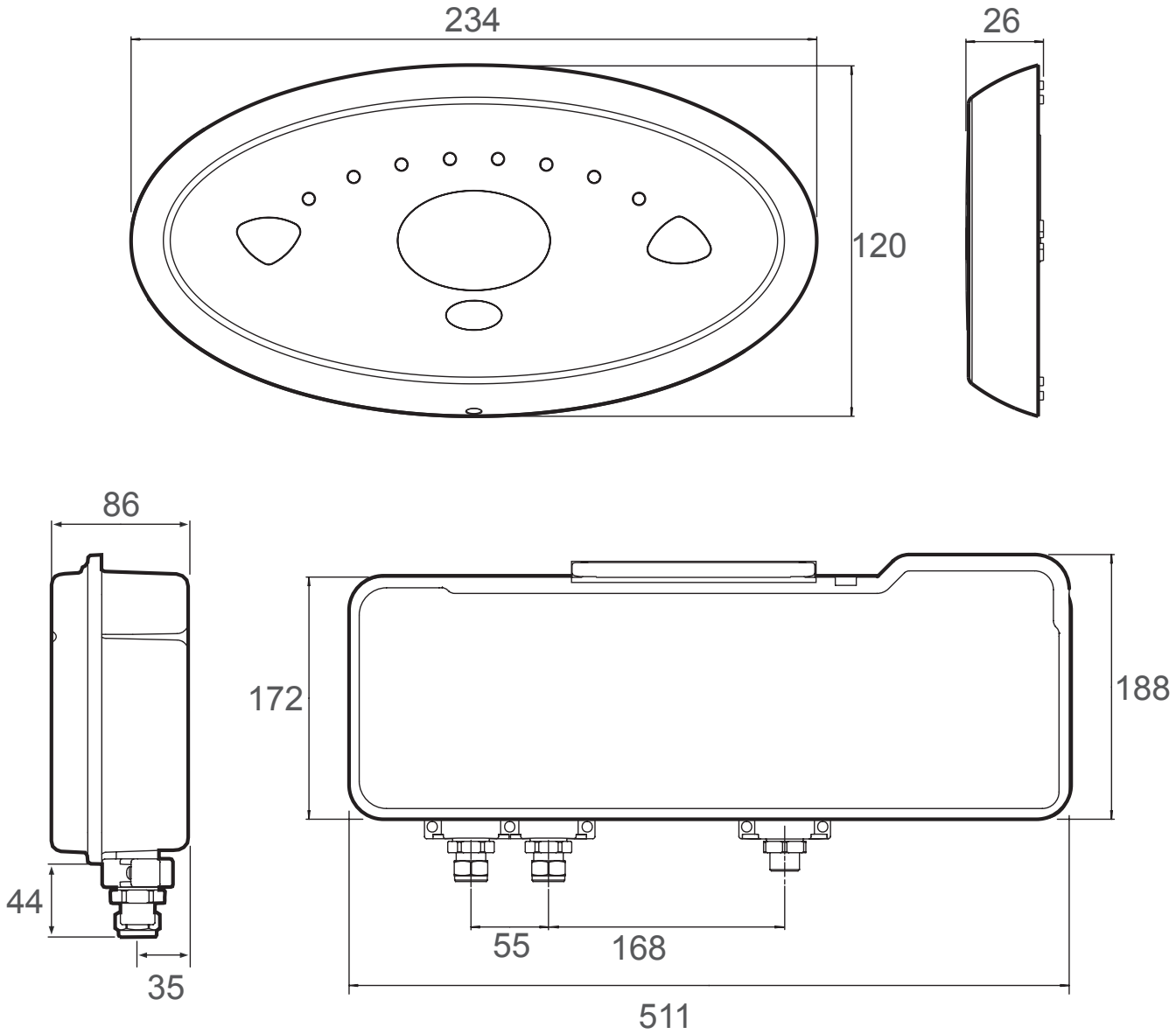## Dimensions (mm)